KISTLER

measure. analyze. innovate.

Instruction manual

Piezoelectric pressure sensors

Type 601C…
Type 603C…

60xC_002-741e-06.24

Foreword

Thank you for choosing a Kistler quality product characterized by technical innovation, precision and long life.

Information in this document is subject to change without notice. Kistler reserves the right to change or improve its products and make changes in the content without obligation to notify any person or organization of such changes or improvements.

© 2015 … 2024 Kistler Group. All rights reserved. Except as expressly provided herein, no part of this manual may be reproduced for any purpose without the express prior written consent of Kistler Group. Kistler Group products are protected by various intellectual property rights. For more details visit www.kistler.com. The Kistler Group includes Kistler Holding AG and all its subsidiaries in Europe, Asia, the Americas and Australia.

Kistler Group
Eulachstrasse 22
8408 Winterthur
Switzerland
Tel. +41 52 224 11 11
info@kistler.com
www.kistler.com

Content

1. Introduction ... 3
2. General functional description ... 4
2.1 PE pressure sensors ... 5
2.1.1 Measuring chain (PE) ... 5
2.1.2 Characteristics of PE sensors and measuring chains ... 6
2.2 IEPE pressure sensors ... 7
2.2.1 Measuring chain (IEPE) ... 7
2.2.2 Characteristics of IEPE sensors and measuring chains ... 8
3. Equipment ... 9
3.1 Sensor housing ... 9
3.2 Sensor dummy ... 10
3.3 Seal (Sensor) ... 10
3.4 Floating clamp nut ... 10
3.5 Adapter ... 11
3.6 Seal (adapter) ... 12
4. Mounting & installation ... 13
4.1 Mounting options ... 13
4.1.1 Direct vs. adapter mounting (sensors with standard housing) ... 13
4.1.2 Direct mounting (sensor with short housing) ... 14
4.1.3 Flush vs. passage mounting ... 14
4.2 Installation ... 17
4.2.1 Floating clamp nut and adapter ... 17
4.2.2 Connector extender Type 6482A ... 18
4.2.3 Cabling ... 19
4.3 Manufacturing of mounting hole ... 20
4.3.1 Direct flush mounting (ISO) ... 20
4.3.2 Direct flush mounting (ANSI) ... 22
4.3.3 Direct passage mounting (ISO) ... 24
4.3.4 Direct passage mounting (ANSI) ... 26
4.3.5 Adapter Mounting (ISO) ... 28
4.3.6 Adapter Mounting (ANSI) ... 29
4.3.7 Cutting Data - 1331C and 1351Ax ... 30
5. Operational Considerations ... 31
5.1 Electrical noise ... 31
5.1.1 PE sensors ... 31
5.1.2 IEPE sensors ... 33
5.2 Ground Loops ... 36
5.3 Thermal effects ... 37
5.3.1 Thermal Zero Shift ... 37
5.3.2 Thermal Sensitivity Shift ... 38
5.3.3 Thermal Shock ... 39
5.4 High frequency response, low-pass filter and sampling rate ... 42
6. Maintenance and calibration ... 43
6.1 Maintenance ... 43
6.1.1 Sensors ... 43
6.1.2 Connectors ... 43
6.2 Calibration ... 45
6.3 Warranty ... 45
6.4 Disposal instructions for electrical and electronic equipment ... 45
7. Conformity declaration ... 46

Total pages 47

1. Introduction

First of all we would like to thank you for trusting Kistler and using one of our sensors for your measurements. Please take the time to thoroughly read this instruction manual. It will help you with the installation, maintenance and use of this product.

To the extent permitted by law Kistler does not accept any liability if this instruction manual is not followed or products other than those listed under *Accessories* are used.

This manual covers several general purpose piezoelectric pressure sensors that are suited for a variety of applications. Please see below list for an overview of sensors covered by this manual:

- 601CAA
- 601CAB
- 601CBA00001.5
- 601CBA00003.5
- 601CBA00007.0
- 601CBA00014.0
- 601CBA00035.0
- 601CBA00070.0
- 601CBA00250.0

- 603CAA
- 603CAB
- 603CBA00014.0
- 603CBA00035.0
- 603CBA00070.0
- 603CBA00350.0
- 603CBA00690.0
- 603CBA01000.0

This manual might have changed since last downloaded, please check the Kistler webpage for the newest version.

For full sensor specifications please refer to the data sheet. If you need any additional help beyond what can be found either on-line or in this manual, please don’t hesitate to contact your local Kistler sales offices.

2. General functional description

Due to their high natural frequencies, piezoelectric pressure sensors can be used for a variety of applications where dynamic pressures need to be measured. Another unique characteristic of piezoelectric pressure sensors is their ability to measure small pressure fluctuations that are superimposed on top of high static pressures with highest resolution.

Please notice that as with any piezoelectric sensor, true static measurements are impossible. Piezoresistive pressure sensors are the right choice when measuring static pressures.

At the core of a piezoelectric pressure sensor there's a synthetic crystal, with quartz being the most used material by sensor manufacturers. Kistler additionally grows own high performance crystals called PiezoStar. Sensors based on PiezoStar crystals show several advantages over quartz based sensors as for example higher operating temperatures, higher sensitivities, etc.

The pressure to be measured acts on the sensor's diaphragm and coverts it into a proportional force which then acts on the crystal. The compressed crystal produces a charge which is proportional to the pressure. The charge itself is being picked-up by the sensors electrode and taken to the plug. Finally the charge signal needs to be converted, by a charge amplifier, into a voltage to be read.

Two variants of piezoelectric sensors are available, charge output (PE) and voltage output (IEPE). The following chapters will give you an overview on the characteristics of both variants, with their corresponding advantages and disadvantages compared to each other and with that give you the chance to select the best option for your corresponding measurement task.

2.1 PE pressure sensors

Piezoelectric pressure sensors with charge output are referred to as PE throughout this document.

2.1.1 Measuring chain (PE)

PE sensors deliver a charge signal; hence the sensitivity is given as pico-coulombs per unit of pressure (e.g. pC/bar or pC/psi). Pressure applied to a PE sensor produces a negative going charge signal (hence the negative sensitivity of PE sensors), which then is turned into a positive voltage signal by the external charge amplifier.

Contrary to IEPE sensors, PE sensors don't need to be powered as a charge signal is produced as soon as pressure is applied to the piezoelectric material. However a special high impedance cable supplied by Kistler is essential to transport the incredibly small charges.

Kistler offers dual-mode (PE and IEPE) multi-channel charge amplifiers with integrate DAQ (digital and analog outputs) which can be connected directly to a PC through an Ethernet cable or through its analog outputs to an external DAQ system. Alternatively Kistler offers single-mode charge amplifiers with analog outputs which can then be connected to an external DAQ system.

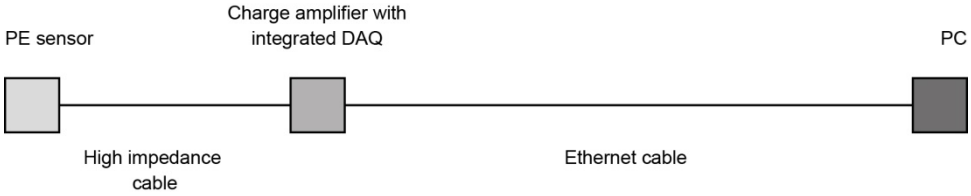

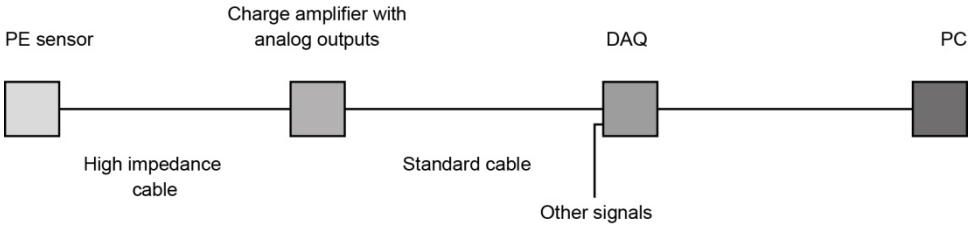

2.1.2 Characteristics of PE sensors and measuring chains

Here's an overview on the main characteristics of PE sensors and measuring chains:

- **Dynamic and quasi-static pressure measurements**
  As already mentioned true static measurements are impossible with any piezoelectric sensor. However with PE sensors quasi-static measurements can be performed. The duration over which so-called quasi-static measurements can be performed depends on the insulation resistance of the sensor and its connecting cable (the higher the better), and the time constant adjusted on the external charge amplifier.

- **Extreme wide operating temperature range**
  Since no electronics are built into the sensor it's possible to operate and measure within an extreme temperature range. The operating temperature range is shown on the data sheet and is wider for sensors based on PiezoStar than quartz crystals.

- **Adjustable FSO pressure range**
  The Full Scale Output (usually ±10 V) pressure range can be adjusted by the external charge amplifier. This means that the same sensor can be used to measure a few mbar or, by changing the measuring range on the charge amplifier, a few hundred bars. This makes the measurement chain very flexible so that it can be used for different measurement tasks and be adjusted to whatever scale is needed.

- **Need for special high impedance cables**
  The charge signal of the PE sensor needs to be transmitted through a special high insulation resistance cable that can be purchased at Kistler. The use of cheaper standard cables leads to drift and is therefore not recommended. Also, high impedance cables should be protected against humidity.

- **Connectors need to be kept clean**
  The connectors (of the sensor, high insulation resistance cable and charge amplifier), must be protected against contamination and humidity in order to keep the high insulation. All plugs must be kept as clean and dry as possible and should therefore always be capped in order to keep contamination out when not connected.

2.2 IEPE pressure sensors

Piezoelectric pressure sensors with voltage output are referred to as IEPE or Piezotron sensors throughout this document. IEPE stands for Integrated Electronics Piezo Electric and refers to an industry standard for piezoelectric sensors with integrated electronic circuits that convert a charge into a voltage signal. Piezotron is the registered trademark of Kistler for IEPE sensors.

2.2.1 Measuring chain (IEPE)

IEPE sensors deliver a voltage signal; hence the sensitivity is given as Millivolt per unit of pressure (e.g. mV/bar or mV/psi). Pressure applied to an IEPE sensor produces a positive voltage signal (hence the positive sensitivity of IEPE sensors).

Contrary to PE sensors, IEPE sensors need to be powered due to the built-in electronics. However a standard two-wire cable suffices to power the sensor and transmit the voltage signal to an IEPE-coupler. An IEPE-Coupler is an electronic circuit that supplies constant current excitation to IEPE sensors and decouples the subsequent voltage signal. So you just see the pressure signal.

Kistler offers dual-mode (PE and IEPE) multi-channel charge amplifiers with integrated IEPE-Coupler and DAQ (digital and analog outputs) which can be connected directly away to a PC through an Ethernet cable or through its analog outputs to an external DAQ system. Alternatively Kistler offers single or multi-channel IEPE-Couplers that can then be connected to an external DAQ system and of course IEPE sensors can directly be connected to any IEPE compatible DAQ.

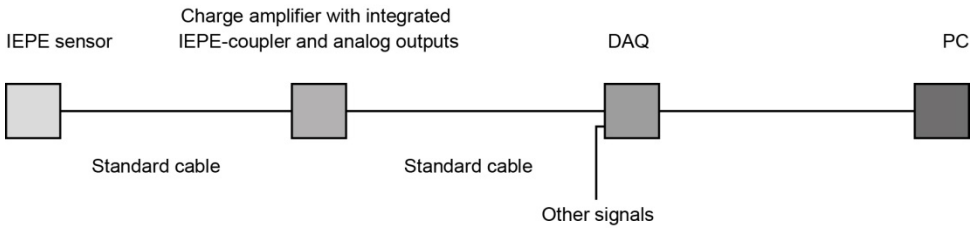

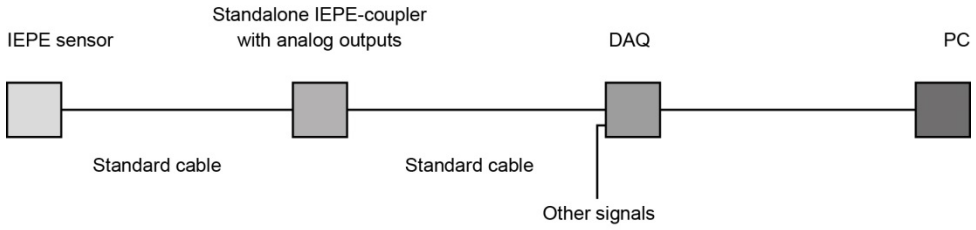

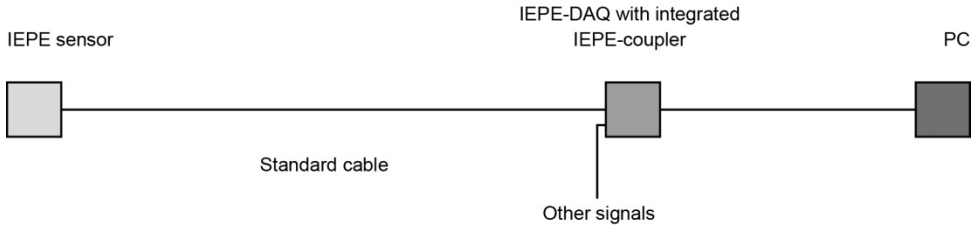

2.2.2 Characteristics of IEPE sensors and measuring chains

- **Only dynamic pressure measurements**
  Whilst quasi-static measurements are possible with PE sensors, this is not the case for IEPE due to the fixed time constant in the built-in charge amp. Nevertheless IEPE sensors are well suited to measure dynamic pressures and pressure pulsations.

- **Limited operating temperature range**
  The operating temperature range of IEPE sensors is limited due to the integrated electronics and is shown in the data sheet.

- **Fixed FSO pressure range**
  The Full Scale Output (usually nominal ±5 V) pressure range of IEPE sensors is fixed by the settings of the integrated electronics and can't be adjusted.

- **Use of standard cables**
  IEPE sensors can be operated with standard two-wire cables. Standard cables can be used in harsh environments and are less sensitive to dirty and humid environments. IEPE sensors are also the preferred choice when very long cables are needed.

- **Compatible with IEPE systems**
  IEPE sensors can be connected directly to IEPE-DAQ's or to a DAQ, through an external IEPE-coupler, if already available, without the need to purchase an external charge amplifier. Sometimes an external IEPE-coupler might offer some technical advantages, as for example a higher power supply to drive longer cables or power supplies with lower noise for a better signal quality.

3. Equipment

3.1 Sensor housing

PE pressure sensors come with a standard or short housing, whereas IEPE sensors are only available with a standard housing. Please notice that the connector for the short housing is different than for the standard housings.

Type	Output signal	Housing	Connector
60xCAA	Charge (PE)	Standard	10-32
60xCAB	Charge (PE)	Short	M4
60xCBA…	Voltage (IEPE)	Standard	10-32

Whenever possible it's recommended to use a piezoelectric sensor with a standard housing.

The sensor version with short housing was primarily developed to be used with a connector extender of Type 6482A.

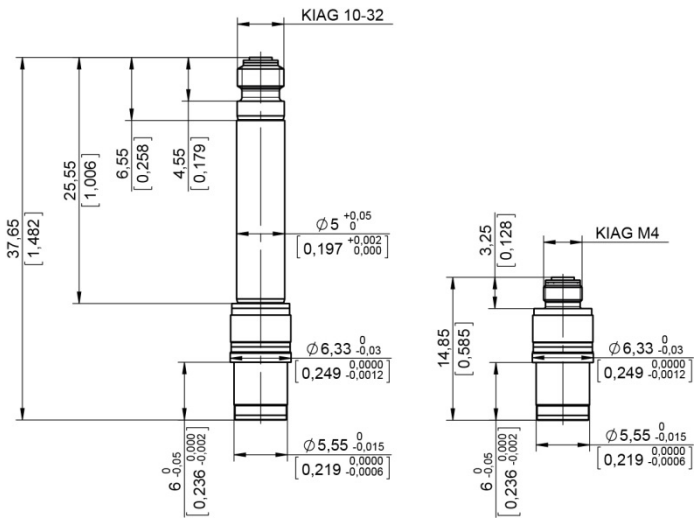

Fig. 1: Standard housing vs. short housing

3.2 Sensor dummy

It's recommended to replace the sensor by a sensor dummy when not being used for measurements or tests where pressures may exceed the maximum overload pressure indicated in the datasheet. Using a dummy sensor allows prolonging the life time of the sensor resp. prevents the sensor being damaged by a too high pressure.

Type	Housing	Connector
6487AA	Standard	10-32
6487AB	Short	M4

3.3 Seal (Sensor)

Below table lists all available sensor seals. Five replaceable copper seals of Kistler Type 1131BA0.15 are part of each sensor delivery. The Cu and Ni seals must be replaced after each sensor deinstallation. The S.S. seal can be used up to 10 times if only tighten at 2Nm (for pressures up to ca. 250 bar), but only once if tightened with ca. 4 to 5Nm (for highest pressures).

Type	Material
1131BA0.15	Cu
1131BB0.20	Ni
1131BC1.15	Stainless Steel 1.4305 (for RTV recess mounting)

3.4 Floating clamp nut

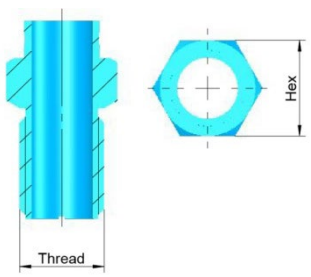

Fig. 2: Floating clamp nut

All of the piezoelectric pressure sensors listed in the introduction of this instruction manual utilize a floating clamp nut to secure the sensor either into a mounting adapter or into an appropriately dimensioned mounting bore (direct mounting). The next chapters will provide some more details on direct and adapter mounting of the sensors.

The floating clamp nut needs to be ordered separately as there are different options to choose from. The table below lists all available types.

Type	Hex	Thread
6423B00	8 mm	M7x0.75
6423B11	9/32"	5/16-24 UNF

3.5 Adapter

Fitting sensors into a mounting adapter greatly simplifies the installation process (for more information see “Mounting Options” chapter). Please find below an overview of available adapters and floating clamp nuts that fit the corresponding adapter:

Type	Material	Adapter Thread	Hex	Floating Clamp Nut
6503C0A	Stainless Steel (1.4542)	M10x1	11 mm	6423B00
6503C1A	Stainless Steel (1.4542)	3/8-24 UNF	7/16”	6423B11
6503C0D	PEEK GF30 (Ground Isolated)	M10x1	11 mm	6423B00
6503C1D	PEEK GF30 (Ground Isolated)	3/8-24 UNF	7/16”	6423B11
6503C3A	Stainless Steel (1.4542)	1/8-27 NPTF	7/16”	6423B11
6507B0A	Stainless Steel (1.4542)	M3x0.5	8 mm	6423B00
6507B1A	Stainless Steel (1.4542)	5-40 UNC	11/32”	6423B11
6509B	Stainless Steel (1.4542)	M14x1.25	18 mm	6423B00

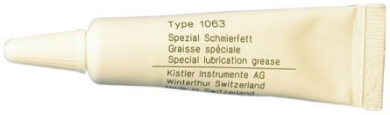

Fig. 3: Kistler lubrication grease, Type 1063

Stainless steel adapters (except Type 6503C3A) include one tube of lubrication grease Type 1063. It’s strongly recommended to apply a thin film of lubricating grease of Kistler Type 1063 to the external thread of the adapter before mounting. The lubrication prevents seizing of the threads and surfaces when demounting the adapter as well as sealing against high pressures.

Below list gives an overview on the approximate pressures up to which the adapters are tight (check chapter 4.2.1 for corresponding tightening torques).

- 6503CxA (with S.S. seal) 1 000 bar / 14 500 psi
- 6503CxA (with Cu seal) 300 bar / 4 350 psi
- 6503CxD (w/o seal)[1] 100 bar / 1 450 psi
- 6503C3A (w/o seal) 1 000 bar / 14 500 psi[2]
- 6507BxA (with Cu seal) 300 bar / 4 350 psi
- 6509B (with Cu seal) 300 bar / 4 350 psi

[1] Max. static temperature 100°C (212°F), use compensation sleeve (delivered with 6503CxD adapters) from 60°C (140°F) on. To be mounted between sensor and floating clamp nut.

[2] Reduced max. pressure for materials with hardness higher than 200 HB.

3.6 Seal (adapter)

One replaceable seal of each type is part of the adapter delivery. Stainless steel gaskets are recommended for high pressure applications and/or hard sealing surfaces while copper gaskets are recommended for low pressure applications, gaseous media and/or soft sealing surfaces. Below table lists all seal types in case replacement is needed.

Type	Material	Adapter
1113C0B	Stainless Steel 1-4301 / 304	6503C0A
1113C0C	Cu	
1113C1B	Stainless Steel 1-4301 / 304	6503C1A
1113C1C	Cu	
1117B0C	Cu	6507B0A 6507B1A
1111	Cu	6509B

4. Mounting & installation

4.1 Mounting options

4.1.1 Direct vs. adapter mounting (sensors with standard housing)

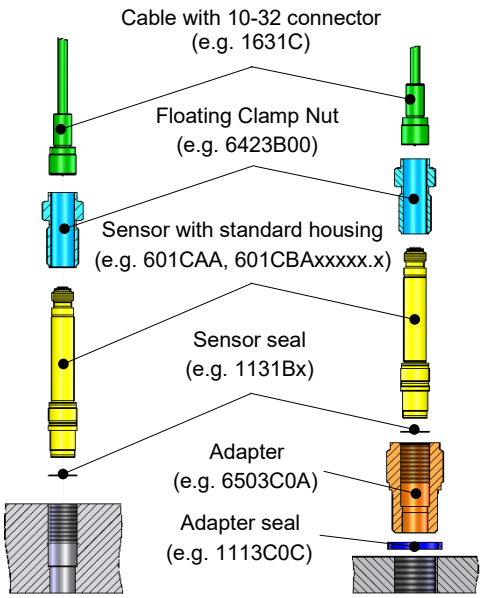

Fig. 4: Direct vs. adapter mounting of sensor with standard housing

Sensors with charge output (PE) and voltage output (IE-PE) are available with standard housing. Sensors with a standard housing can either be installed directly or with an adapter.

Direct Mounting
When the mounting location space is restricted, the sensor can be located in an appropriately dimensioned mounting bore, and then held in place with a floating clamp nut. Please note that for a reliable and accurate pressure measurement a precise machining of the mounting hole with special reamer and taps is required (for details on mounting hole fabrication please see corresponding chapter).

Adapter Mounting
Fitting sensors into a mounting adapter greatly simplifies the installation process (when space and wall thickness are not a premium). Use of a Kistler mounting adapter will eliminate the need to provide a precise mounting configuration and allow the installer to provide only a threaded hole of the size and depth required for the adapter selected. Special reamers or taps are not required when using an adapter (for details on mounting thread fabrication please see corresponding chapter).

4.1.2 Direct mounting (sensor with short housing)

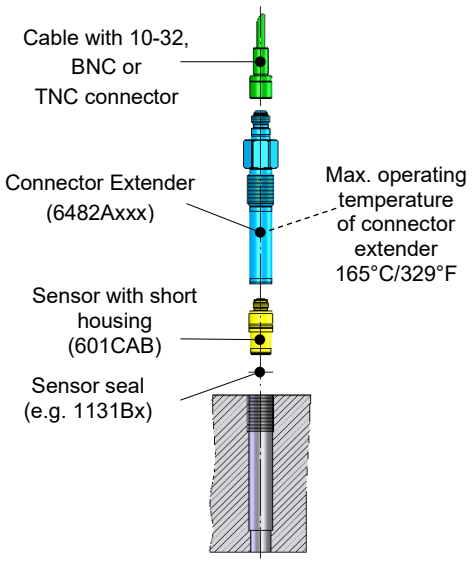

Fig. 5: Direct mounting of sensor with short housing

Sensors with charge output (PE) are also available with short housing. For the mounting of these sensors a connector extender of Type 6482A is required. This mounting form is mostly only used where mechanical structures cannot be weakened.

Connector extenders are made to order and are therefore not stock items (unlike floating clamp nuts of Type 6423B). Customers can choose between three different connectors, two different threads and a variable length (see sensor datasheet for different options and ordering key).

Please note that for a reliable and accurate pressure measurement a precise machining of the mounting hole with special reamers and taps is required (same as for direct mounting of sensors with standard housing).

4.1.3 Flush vs. passage mounting

Ideally for best accuracy, minimal rise time and max. frequency response a pressure sensor should be mounted with its sensing diaphragm flush with the pressure chamber inner wall. Flush mounting of pressure sensors is desirable for minimizing turbulences, avoiding cavity effects or avoiding an increase in a chamber volume too.

However sometimes, due to access restrictions to the pressure chamber or due to severe environments (e.g. particle impingement, high temperatures, etc.), this is not possible and therefor a passage mounting is required.

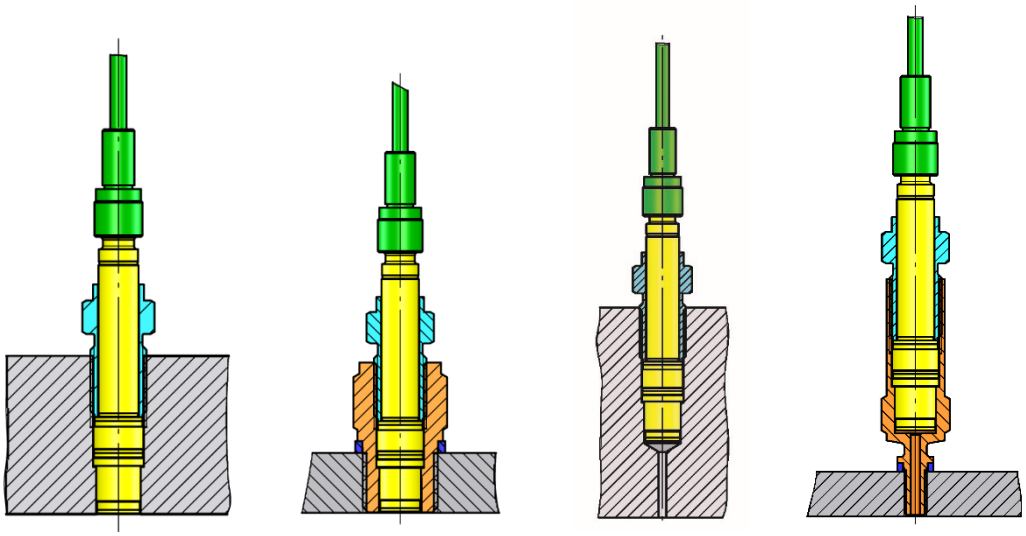

Fig. 6: Flush (direct / adapter) vs. passage (direct/ adapter) mounting

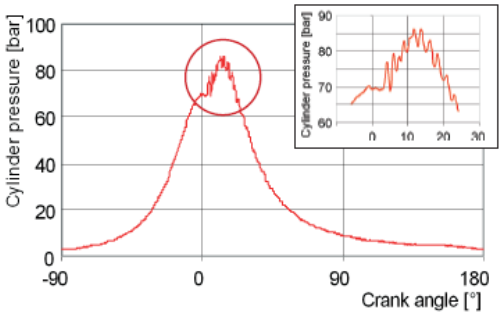

Fig. 7: Acoustic oscillations in an indicator passage. The fast pressure rise at the beginning of the combustion excites the oscillation.

With passage mountings, acoustic oscillations may occur in the cavity if the gas to be measured is stimulated by a fast pressure change at the entrance of the passage. This effect is commonly referred to as the 'organ-pipe effect'. The pressure oscillation in the cavity is superimposed to the regular pressure and may affect the signal quality by making important information like maximum pressures difficult to extract.

When a sensor installation requires a passage mounting, it's recommended to model (e.g. Bergh & Tijdeman, Helmholtz, organ-pipe acoustical models) the natural frequency of the passage accurately and to design the size and shape of the passage to optimize the signal quality. Nominally, the suggested passage diameter would be equal or greater than 20% of the passage length.

Below drawing shows the dead volume in front of the pressure sensors installed in a Type 6507B and Type 6509B adapter and in the graphs the estimated acoustic resonances.

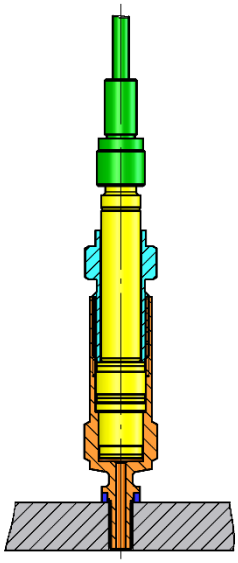

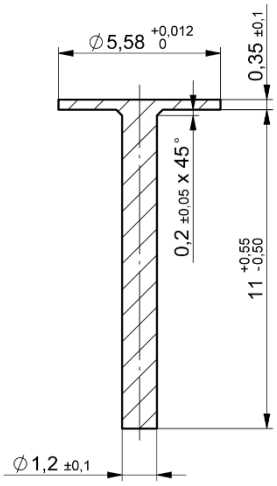

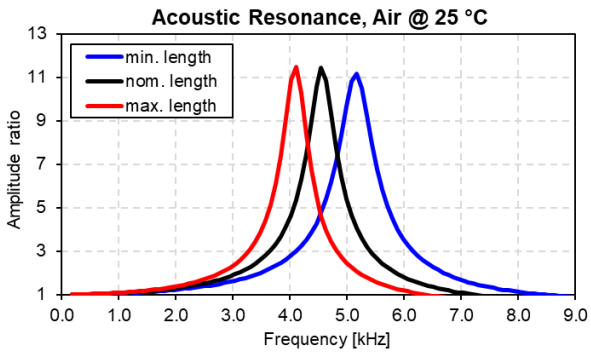

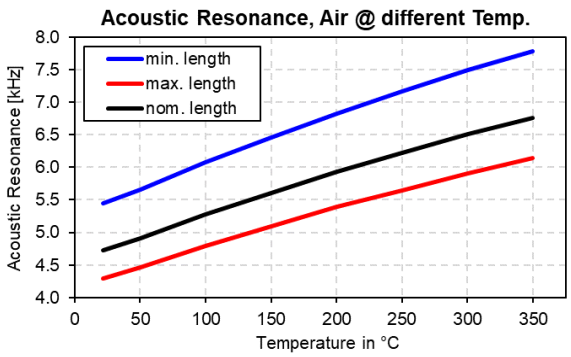

Fig. 8: Dead volume of Type 6507B adapter with corresponding acoustic resonances

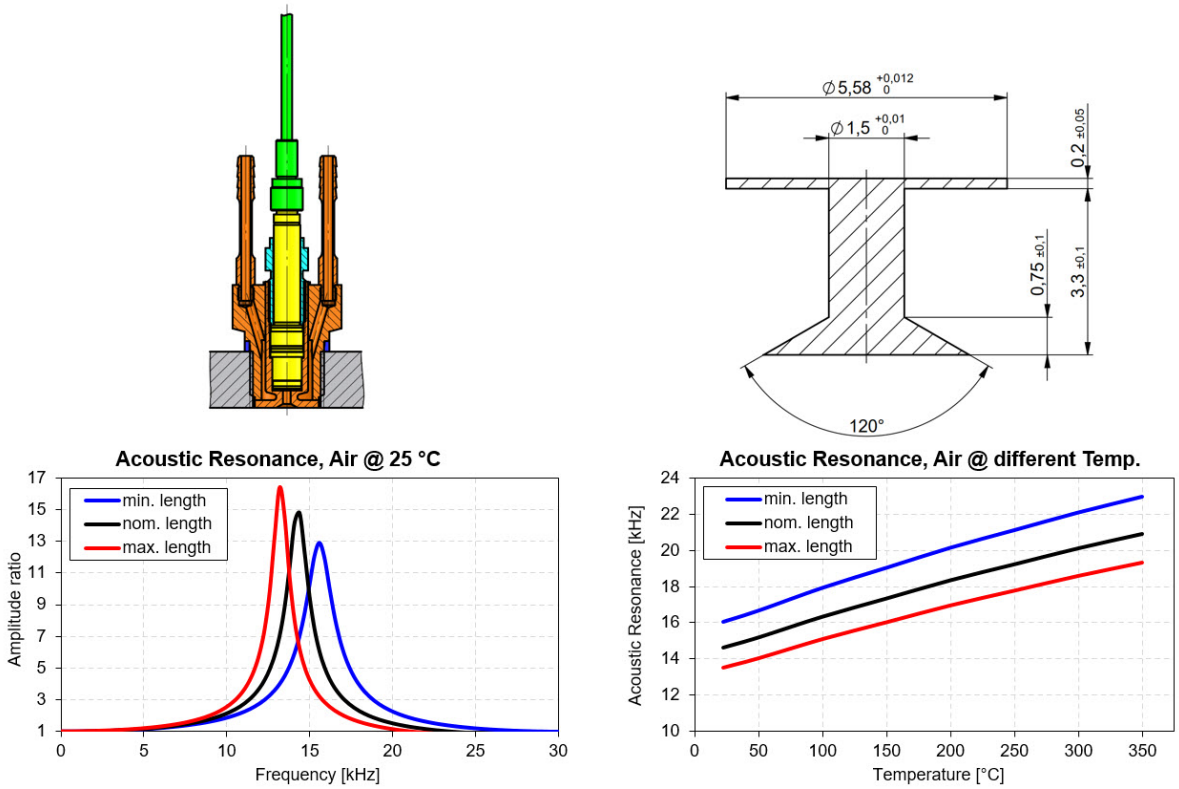

Fig. 9: Dead volume of Type 6509B adapter with corresponding acoustic resonances

4.2 Installation

4.2.1 Floating clamp nut and adapter

It's mandatory to use a torque wrench for tightening the floating clamp nut and sensor in order to ensure tightness at the max. specified pressures. Following table gives on overview on the corresponding torques to be applied when using a Kistler adapter. For different materials resp. material strengths, the max. tightening torque may differ from below recommended values.

Floating clamp nut	N·m	in·lbf
6423B00 [1, 2]	2 … 5	17.7 … 44.3
6423B11 [1]	2 … 5	17.7 … 44.3

[1] For 6503CxD adapters only 1 N·m (8.9 in·lbf)
[2] For 6509B adapter only 2 N·m (17.7 in·lbf)

Adapter	N·m	in·lbf
6503C0A / 6503C1A (with S.S. seal)	10	88.5
6503C0A / 6503C1A (with Cu seal)	4	35.4
6503C0D / 6503C1D	2	17.7
6503C3A	20	177.0
6507B0A / 6507B1A	1	8.9
6509B	15	132.7

The adapter should whenever possible be mounted and tightened first (without sensor) and then in a second step the sensor with the floating clamp nut. For demounting start first with the floating clamp nut, then the sensor and finally the adapter.

It's strongly recommended to apply a thin film of lubricating grease of Kistler Type 1063 to the external thread of the stainless steel adapters (except Type 6503C3A) before mounting. The lubrication prevents seizing of the threads and surfaces when demounting the adapter as well sealing against high pressures. Stainless steel adapters (except Type 6503C3A) include one tube of lubrication grease Type 1063.

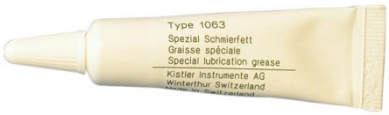

Fig. 10: Kistler lubrication grease, Type 1063

4.2.2 Connector extender Type 6482A

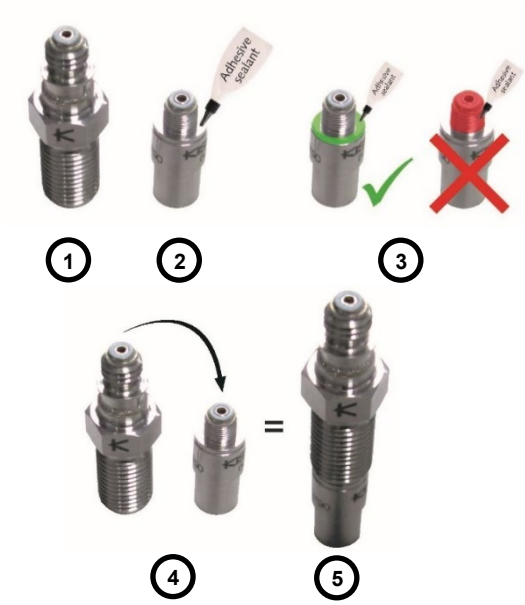

Fig. 11: Preassembly of short sensor and connector extender Type 6482A to a mounting unit

It's mandatory to use a torque wrench for tightening the connector extender and sensor in order to ensure tightness at the max. specified pressures. Do not exceed however a tightening torque of more than 4 Nm (35.4 in·lbf).

Short sensors and connector extenders are commonly preassembled to a mounting unit. Thereby applying an adhesive sealant (e.g. Loctite 221) between connector extender and sensor prevents any loosening from shock and vibration. At the same time, it seals off and impedes external liquids from entering into the connectors and corrupt the sensors electrical isolation. Attention should be kept as well on the fact that adhesive sealants will stop working at specified temperature's that could lye well below the sensors or connector extenders maximum operating temperature. The adhesive sealant should as well be designed for the easy disassembly with standard hand tools as this is a requirement for most applications.

If the pressure sensor is stuck in the mounting bore while the connector extender Type 6482 is unscrewed, the use of the extraction tool Kistler Type 1311, as shown in below graphs, is recommended.

The extraction tool Kistler Type 1311 can be used for bore depths up to 66.9 mm (2.633").

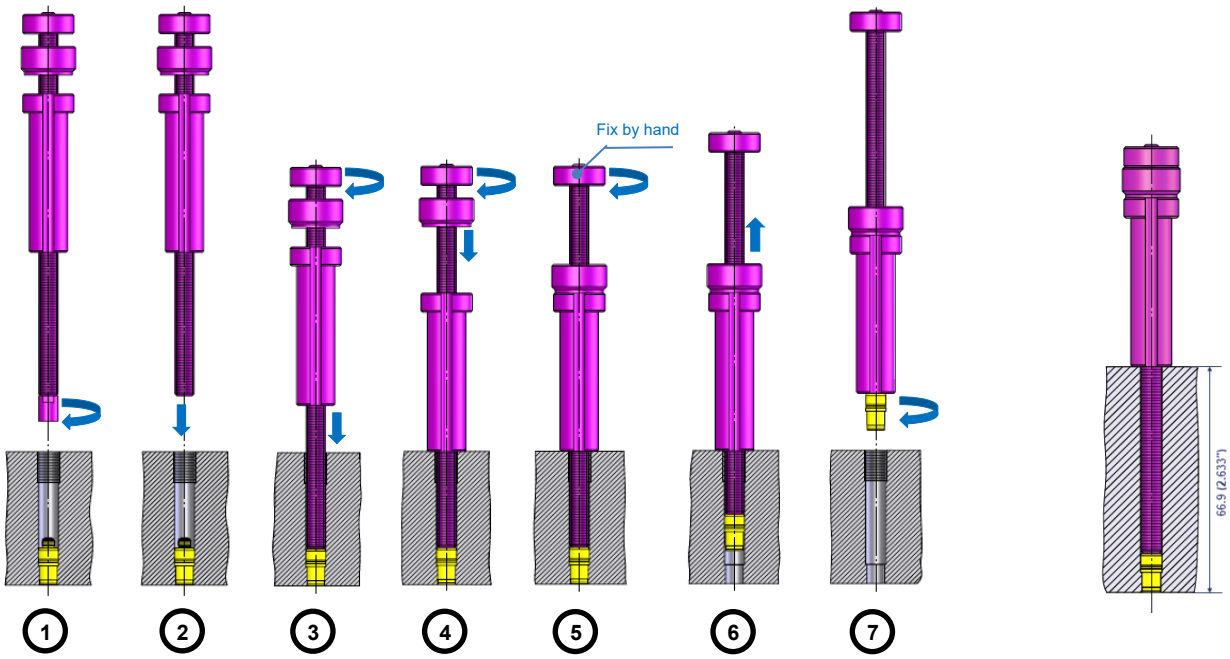

Fig. 12: Use of extraction tool 1311 to pull out short sensor version that are stuck in mounting bore

4.2.3 Cabling

Cables should be routed to avoid tension, kinking, and sharp bends, particularly at the connectors. Restrain cables by tying, taping or clamping in high vibrations environments so as to avoid mechanical damage. For high impedance cables this also removes triboelectric noise. Care should be taken to avoid routing wires near hot pipes or where cable damage could occur from moving parts of the installation.

4.3 Manufacturing of mounting hole

4.3.1 Direct flush mounting (ISO)

The following procedure is recommended for the manufacturing of a direct flush mounting bore with M7x0.75 thread and use of ISO floating clamp nut 6423B00. For precision machining of the direct mounting bore Kistler's step reamer Type 1331C (Solid Carbide) and tap Type 1351A0 (HSSE) are available.

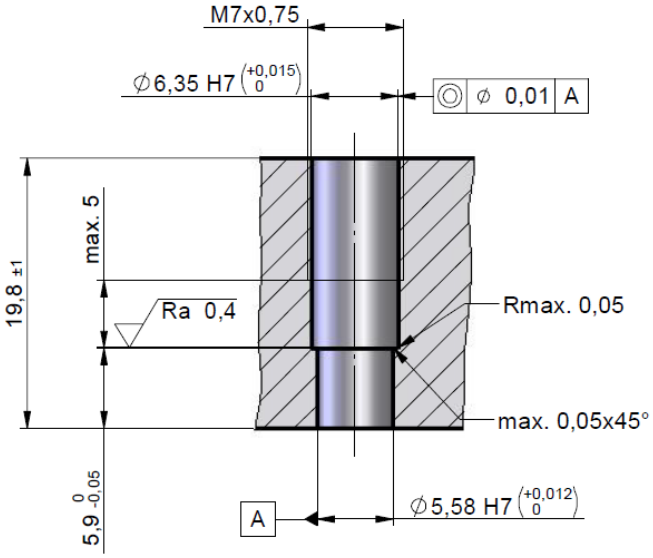

Fig. 13: Direct flush bore (ISO)

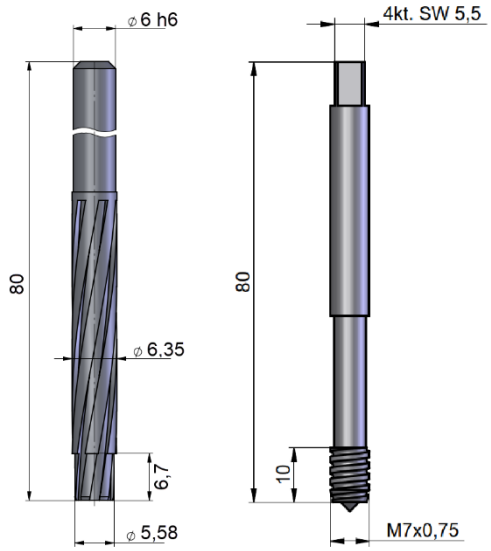

Fig. 14: Kistler step reamer Type 1331C and tap Type 1351A0

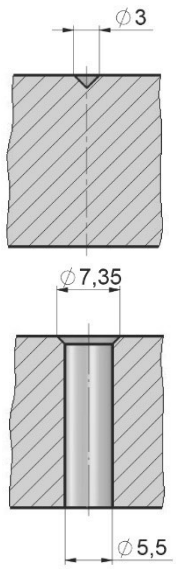

1. Centering hole, use a center drill with 3.0 mm diameter and 90° chamfer angle.

2. Ø5.5 mm through-hole, use a spiral drill with 5.5 mm diameter.

   Ø7.35 mm countersink at the entrance of the Ø5.5 mm blind hole, use a countersink cutter with a 90° chamfer angle.

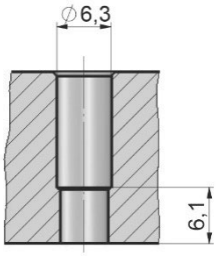

3. Ø6.3 mm blind hole, use a spiral drill with 6.3 mm diameter. Select the bore depth accordingly, so that the front cutting lips of the spiral drill do not undercut the residual wall thickness of 6.1 mm at the diameter of 5.5 mm.

☞ A too deep blind hole will damage the contact surface to the sensor (shoulder) and thus the sealing surface. This could result in leakage at low pressure.

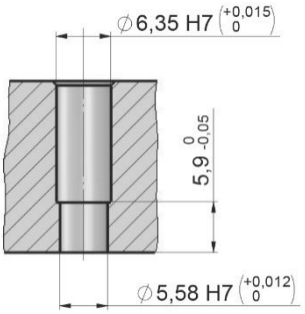

4. Stepped bore, use the Kistler step reamer type 1331C to obtain the final dimensions of the direct mounting bore. The residual wall thickness is 5.9 mm.

☞ The sealing surface (shoulder) created by the step reamer must meet following requirements: A surface flatness of 30 µm or less, no radial chatter marks and a maximum roughness of 0.4 µm.

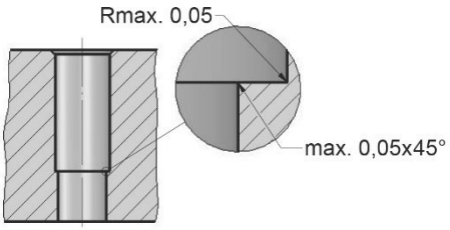

5. Chamfer, chamfer the inner edge of the sealing surface to a maximum size of 0.05 mm x 45°.

☞ Keep the chamfer as small as possible in order to obtain a large sealing surface.

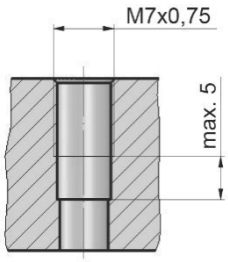

6. Thread, use a M7x0.75 tap. The thread must be fully functional up to a maximum distance of 5 mm from the sealing surface.

☞ Pay attention to the thread run-out length to prevent damage to the sealing surface.

7. Rework direct mounting bore to meet specifications if required.

4.3.2 Direct flush mounting (ANSI)

The following procedure is recommended for the manufacturing of a direct flush mounting bore with 5/16-24 UNF thread and use of ANSI floating clamp nut 6423B11. For precision machining of the direct mounting bore Kistler's step reamer Type 1331C (Solid Carbide) and tap Type 1351A1 (HSSE) are available.

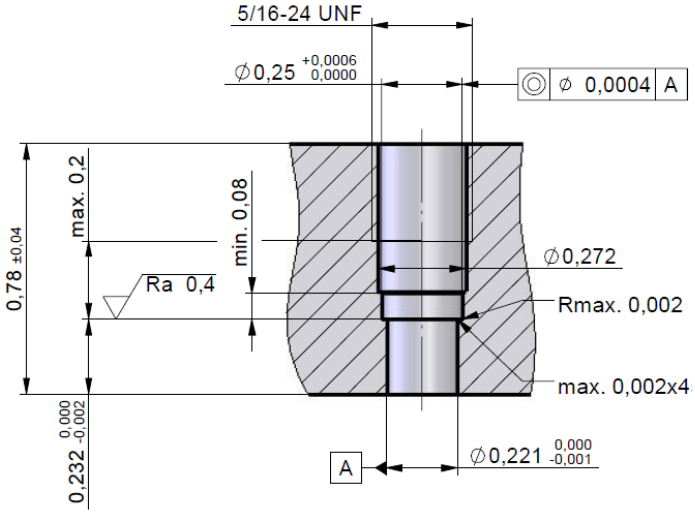

Fig. 15: Direct flush mounting bore (ANSI)

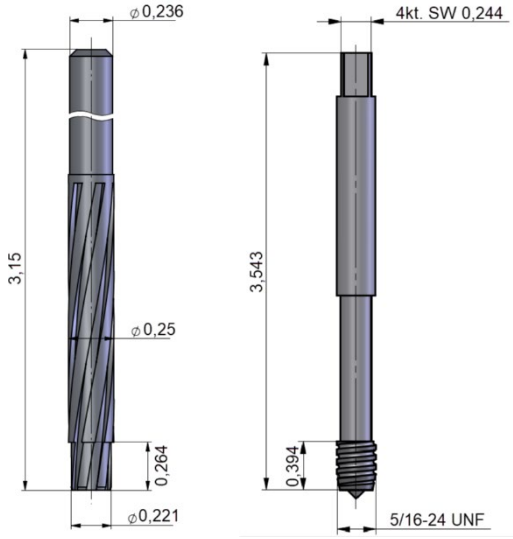

Fig. 16: Kistler step reamer Type 1331C and tap Type 1351A1

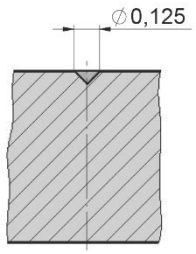

1. Centering hole, use a center drill with 0.125″ diameter and 90° chamfer angle.

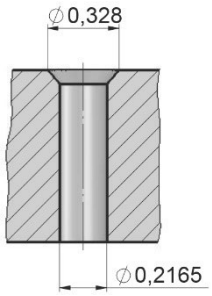

2. Ø0.2165″ through-hole, use a spiral drill with 0.2165″ diameter.

   Ø0.328″ countersink at the entrance of the 0.2165″ blind hole, use a countersink cutter with a 90° chamfer angle.

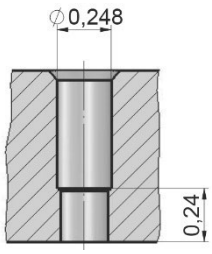

3. Ø0.248″ blind hole, use a spiral drill with 0.248″ diameter. Select the bore depth accordingly, so that the front cutting lips of the spiral drill do not undercut the residual wall thickness of 0.24″ at the diameter of 0.2165″.

☞ A too deep blind hole will damage the contact surface to the sensor (shoulder) and thus the sealing surface. This could result in leakage at low pressure.

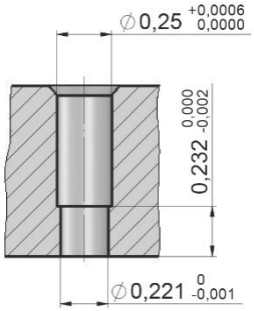

4. Stepped bore, use the Kistler step reamer type 1331C to obtain the final dimensions of the direct mounting bore. The residual wall thickness is 0.232″.

☞ The sealing surface (shoulder) created by the step reamer must meet following requirements: A surface flatness of 0.001″ or less, no radial chatter marks and a maximum roughness of 0.000016″.

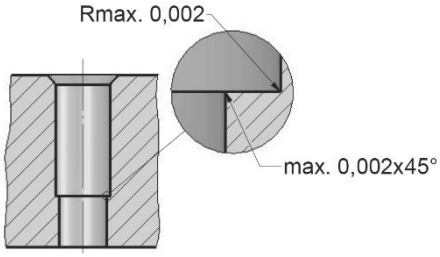

5. Chamfer, chamfer the inner edge of the sealing surface to a maximum size of 0.002″ x 45°.

☞ Keep the chamfer as small as possible in order to obtain a large sealing surface.

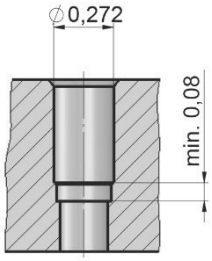

6. Ø0.272″ blind hole, use a spiral drill with 0.272″ diameter. Select the bore depth accordingly, so that sufficient length is available for the 5/16-24 UNF thread run-out, but the minimum distance to the sealing surface of 0.08” is not undercut.

☞ Pay attention to the blind hole depth to prevent damage to the sealing surface (minimum distance of 0.08”).

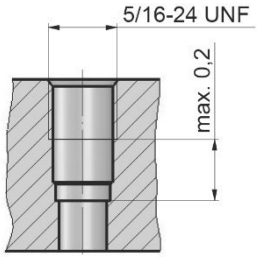

7. Thread, use a 5/16-24 UNF tap. The thread must be usable up to a maximum distance of 0.2″ from the sealing surface.

☞ Pay attention to the thread run-out length to prevent damage to the sealing surface.

8. Rework direct mounting bore to meet specification if required.

4.3.3 Direct passage mounting (ISO)

The following procedure is recommended for the manufacturing of a direct passage mounting bore with M7x0.75 thread and use of ISO floating clamp nut 6423B00. For precision machining of the direct mounting bore Kistler's step reamer Type 1331C (Solid Carbide) and tap Type 1351A0 (HSSE) are available.

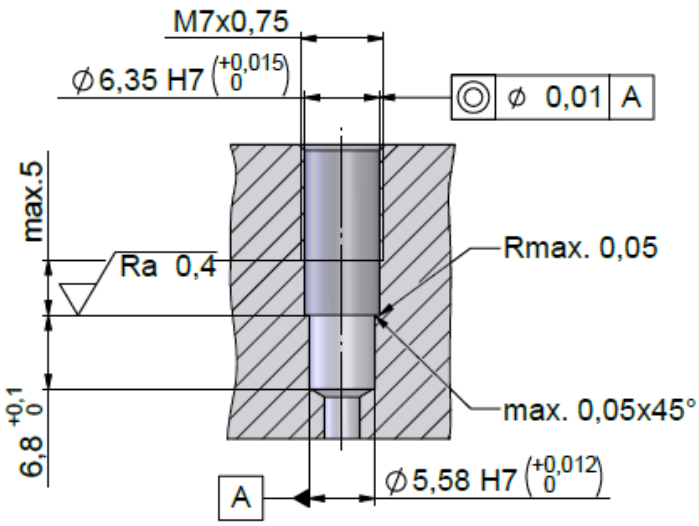

Fig. 17: Direct passage mounting bore (ISO)

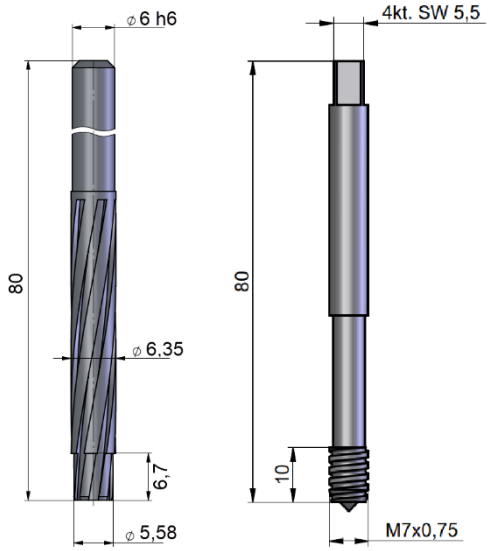

Fig. 18: Kistler step reamer Type 1331C and tap Type 1351A0

1. Centering hole, use a center drill with 3.0 mm diameter and 90° chamfer angle.

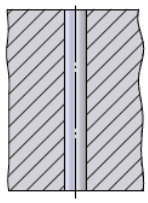

2. Through-hole, use a spiral drill with the needed passage diameter.

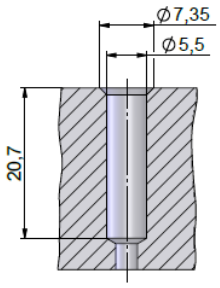

3. Ø5.5 mm bling hole, use a spiral drill with Ø5.5 mm diameter and drill to max. drill point depth of 20.7 mm.

   Ø7.35 mm countersink at the entrance of the Ø5.5 mm blind hole, use a countersink cutter with a 90° chamfer angle.

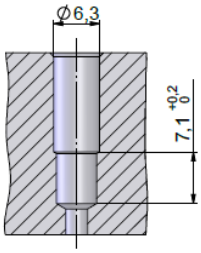

4. Ø6.3 mm blind hole, use a spiral drill with 6.3 mm diameter. Select the bore depth accordingly, so that the front cutting lips of the spiral drill do not undercut the residual wall thickness to the passage bore of 7.1 mm at the diameter of 5.5 mm.

☞ A too deep blind hole will damage the contact surface to the sensor (shoulder) and thus the sealing surface. This could result in leakage at low pressure.

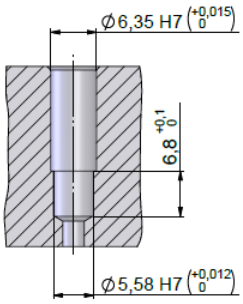

5. Step reamer, use the Kistler step reamer type 1331C to obtain the final dimensions of the direct mounting bore. The residual wall thickness to the passage bore is 6.8 mm.

☞ The sealing surface (shoulder) created by the step reamer must meet following requirements: A surface flatness of 30 µm or less, no radial chatter marks and a maximum roughness of 0.4 µm.

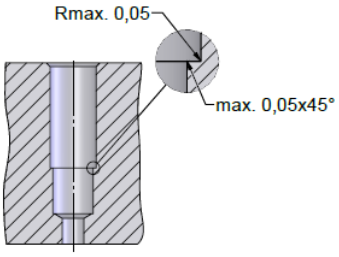

6. Chamfer, chamfer the inner edge of the sealing surface to a maximum size of 0.05 mm x 45°.

☞ Keep the chamfer as small as possible in order to obtain a large sealing surface.

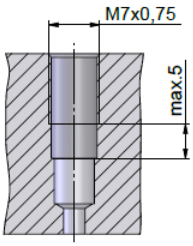

7. Thread, use a M7x0.75 tap. The thread must be fully functional up to a maximum distance of 5 mm from the sealing surface.

☞ Pay attention to the thread run-out length to prevent damage to the sealing surface.

8. Rework direct mounting bore to meet specifications if required.

4.3.4 Direct passage mounting (ANSI)

The following procedure is recommended for the manufacturing of a direct passage mounting bore with 5/16-24 UNF thread and use of ANSI floating clamp nut 6423B11. For precision machining of the direct mounting bore Kistler's step reamer Type 1331C (Solid Carbide) and tap Type 1351A1 (HSSE) are available.

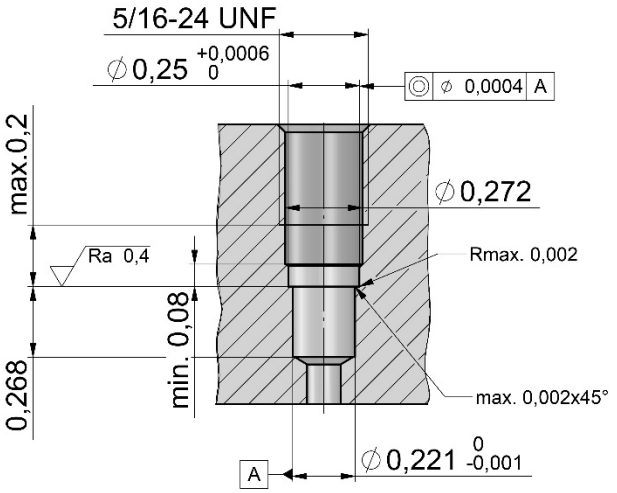

Fig. 19: Direct passage mounting bore (ANSI)

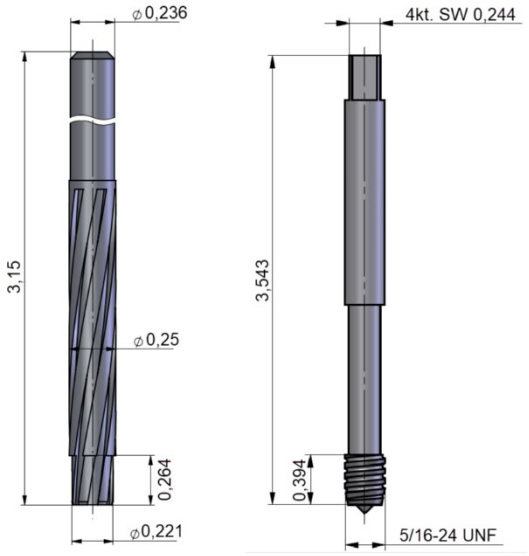

Fig. 20: Kistler step reamer Type 1331C and tap Type 1351A1

1. Centering hole, use a center drill with 0.125″ diameter and 90° chamfer angle.

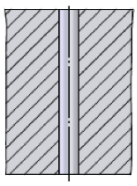

2. Through-hole, use a spiral drill with the needed passage diameter.

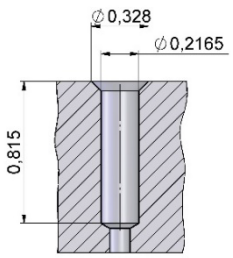

3. Ø0.2165″ blind hole, use a spiral drill with 0.2165″ diameter and drill to max. drill point depth of 0.815″.

   Ø0.328″ countersink at the entrance of the 0.2165″ blind hole, use a countersink cutter with a 90° chamfer angle.

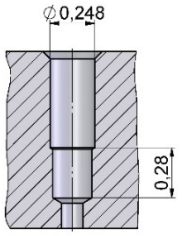

4. Ø0.248″ blind hole, use a spiral drill with 0.248″ diameter. Select the bore depth accordingly, so that the front cutting lips of the spiral drill do not undercut the residual wall thickness to the passage bore of 0.28″ at the diameter of 0.2165″.

☞ A too deep blind hole will damage the contact surface to the sensor (shoulder) and thus the sealing surface. This could result in leakage at low pressure.

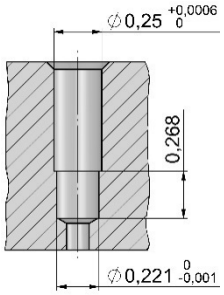

5. Step reamer, use the Kistler step reamer type 1331C to obtain the final dimensions of the direct mounting bore. The residual wall thickness to the passage bore is 0.268″.

☞ The sealing surface (shoulder) created by the step reamer must meet following requirements: A surface flatness of 0.001″ or less, no radial chatter marks and a maximum roughness of 0.000016″.

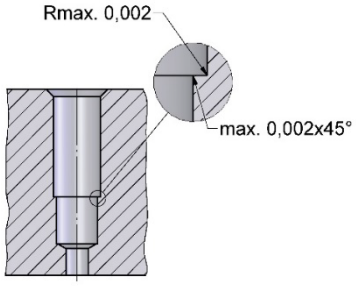

6. Chamfer, chamfer the inner edge of the sealing surface to a maximum size of 0.002″ x 45°.

☞ Keep the chamfer as small as possible in order to obtain a large sealing surface.

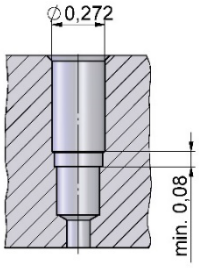

7. Ø0.272″ blind hole, use a spiral drill with 0.272″ diameter. Select the bore depth accordingly, so that sufficient length is available for the 5/16-24 UNF thread run-out, but the minimum distance to the sealing surface of 0.08” is not undercut.

☞ Pay attention to the blind hole depth to prevent damage to the sealing surface (minimum distance of 0.08”).

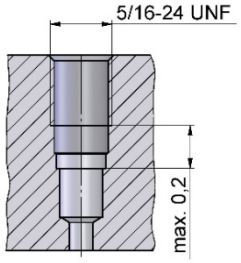

8. Thread, use a 5/16-24 UNF tap. The thread must be usable up to a maximum distance of 0.2″ from the sealing surface.

☞ Pay attention to the thread run-out length to prevent damage to the sealing surface.

9. Rework direct mounting bore to meet specification if required.

4.3.5 Adapter Mounting (ISO)

The following drawings show the mounting bore for all of the available ISO adapters.

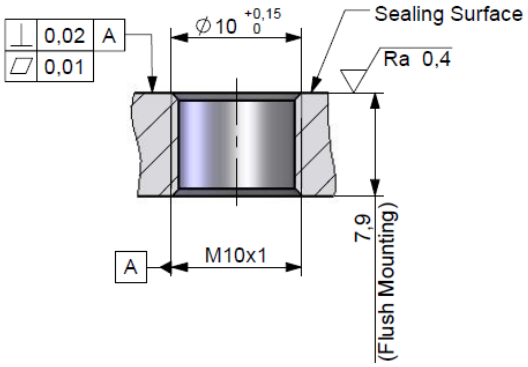

Fig. 21: Mounting bore for 6503C0A/D adapters

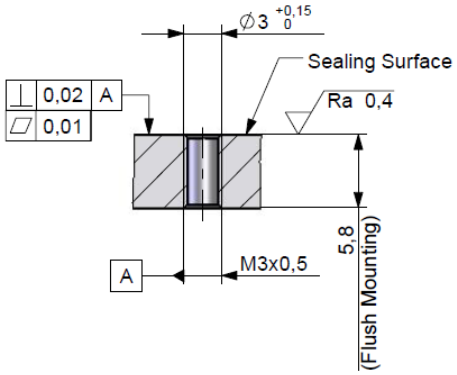

Fig. 22: Mounting bore for 6507B0A adapter

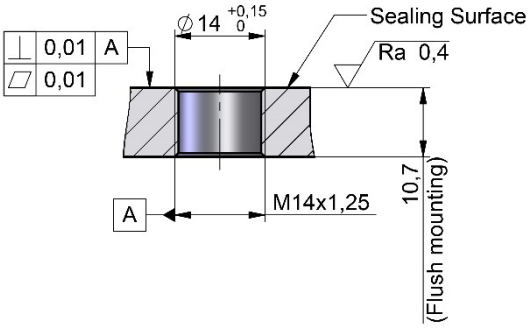

Fig. 23: Mounting bore for 6509B adapter

4.3.6 Adapter Mounting (ANSI)

The following drawings show the mounting bore for all of the available ANSI adapters.

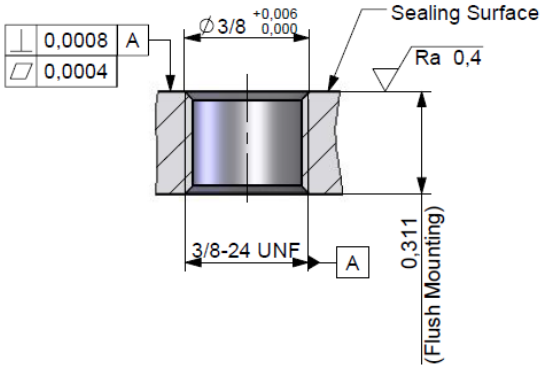

Fig. 24: Mounting bore for 6503C1A/D adapters

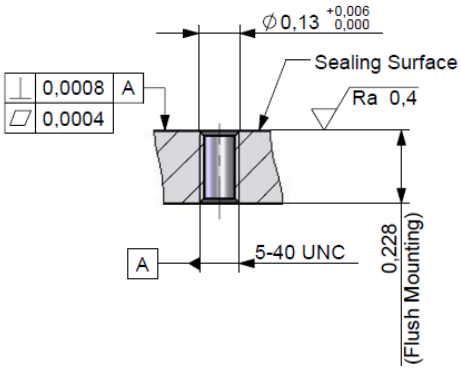

Fig. 25: Mounting bore for 6507B1A adapter

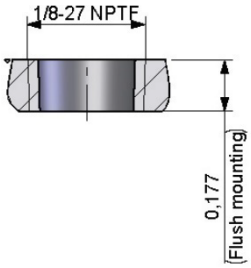

Fig. 26: Mounting bore for 6503C3A adapter

4.3.7 Cutting Data - 1331C and 1351Ax

Material group	Material	Feed per tooth Fz in mm/U	Cutting speed Vc in m/min
P	Non-alloy and low alloy steels < 900N/mm²	0.05-0.13	6-10
	Lead alloyed steels, lead alloys > 900N/mm²	0.05-0.13	20-50
M	High alloy steels	0.04-0.10	4-7
	Stainless steel	0.04-0.10	5-8
S	Titanium, titanium alloys	0.05-0.11	5-16
K	Gray cast iron	0.06-0.14	10-25
	Alloy cast iron	0.06-0.12	6-12
	Spherodial graphite cast iron, ferritic/perlitic	0.06-0.14	9-18
	Spherodial graphite cast iron, perlitic malleble iron	0.06-0.12	8-15
	Alloyed spherodial graphite cast iron, vermicular cast	0.06-0.12	8-15
N	Copper alloy, brass, bronze	0.06-0.12	10-30
	Wrought aluminium alloys	0.06-0.12	10-30
	Cast aluminium alloy	0.06-0.12	10-25

Cutting Data 1331C

Applications - materials			Cutting speed Vc in m/min		
			min.	recommended	max.
P1.1	Construction steels, Free-cutting steels, etc.	<= 600 N/mm²	5	15	25
P2.1	Construction steels, Cementation steels, Steel castings, etc.	<= 800 N/mm²	5	10	20
P3.1	Cementation steels, Heat-treatable steels, Cold work steels, etc.	<= 1000 N/mm²	2	8	15
N2.2	Copper-zinc alloys (brass, long-chipping)	<= 550 N/mm²	10	20	40

Cutting Data 1351Ax

5. Operational Considerations

5.1 Electrical noise

With piezoelectric measuring chains, electrical noise is usually only a matter when measuring small pressures. Obviously, in such cases the higher the noise, the lower the accuracy and resolution become. Low-level pressure measurements therefor require a familiarity with noise, its sources and mitigations.

5.1.1 PE sensors

The main sources of electrical noise in a PE measuring chain are:

- Sensor type
- Cable length
- Charge amplifier type
- Power supply
- Signal filtering

Sensor type
Using a sensor type with higher sensitivity reduces noise.

Cable length
Noise in a PE measuring chain increases linearly with its cable length (increase of total cable capacitance).

Charge amplifier type & settings
High-End charge amplifiers (e.g. 5018, 5080) show a reduced noise level compared to standard charge amplifiers (e.g. 5165, 5167, 5015). Using a small measuring range on the charge amplifier is of further help to reduce noise.

Power supply
Lowest noise levels can be achieved when using batteries to supply the charge amplifier with power. However, for practical reasons this may not always be possible and in such cases the use of a net filter on the power supply is recommended.

Signal filtering
Using a bandpass to filter the signal to the needed bandwidth further reduces noise.

The following table provides an overview of the typ. int. PSD noise level of the 601C and 603C PE sensors. The typical values are based on a 1m 1631C cable and an charge amplifier Type 5018.

Noise (frequency range)			601CAx	603CAx
1Hz … 10 kHz	(typ.)	μbar_{rms}	15	126
1Hz … 100 kHz	(typ.)	μbar_{rms}	32	286

Below integral PSD curves allow the determination of typ. noise values at different frequency ranges. The delta in the frequency range provides the corresponding delta in noise. Below example with red lines shows a typ. noise value for a 601CAA sensor of ca. 2 μbar_{rms} for a frequency range of 10 to 100 Hz.

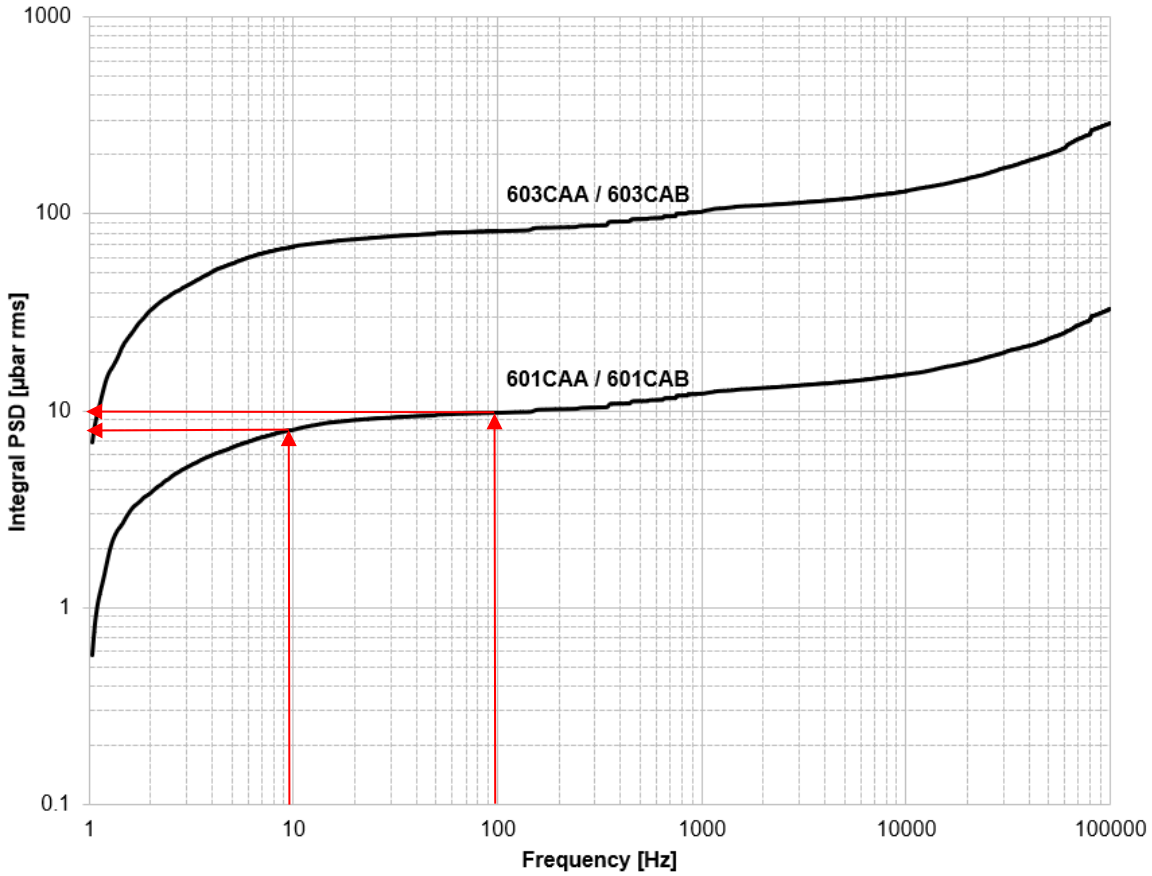

Fig. 27: Integral PSD (typ.) noise of PE measuring chain with 601C and 603C pressure sensors

5.1.2 IEPE sensors

The main sources of electrical noise in an IEPE measuring chain are:

- Pressure range
- IEPE coupler type
- Power supply
- Signal filtering

Pressure type
Using an IEPE sensor type with a lower pressure range reduces noise.

IEPE coupler type
High-End IEPE couplers (e.g. 5108) show a reduced noise level compared to standard IEPE couplers (e.g. 5165).

Power supply
Lowest noise levels can be achieved when using batteries to supply the IEPE coupler with power. However, for practical reasons this may not always be possible and in such cases the use of a net filter on the power supply is recommended.

Signal filtering
Using a bandpass to filter the signal to the needed bandwidth further reduces noise.

The following table provides an overview of the typ. int. PSD noise level of the 601C IEPE sensors. The typical values are based on a 1m 1631C cable and battery powered IEPE coupler Type 5108.

	Noise (frequency range)	
601C Series (IEPE)	1Hz … 10 kHz (typ.) µbar$_{rms}$	1Hz … 100 kHz (typ.) µbar$_{rms}$
601CBA00001.5	3	4
601CBA00003.5	8	9
601CBA00007.0	16	18
601CBA00014.0	32	37
601CBA00035.0	79	92
601CBA00070.0	160	185
601CBA00250.0	567	656

Below integral PSD curves allow the determination of typ. noise values at different frequency ranges. The delta in the frequency range provides the corresponding delta in noise. Below example with red lines shows a typ. noise value for a 601CBA00001.5 sensor of ca. 1 µbar$_{rms}$ for a frequency range of 10 to 1000 Hz.

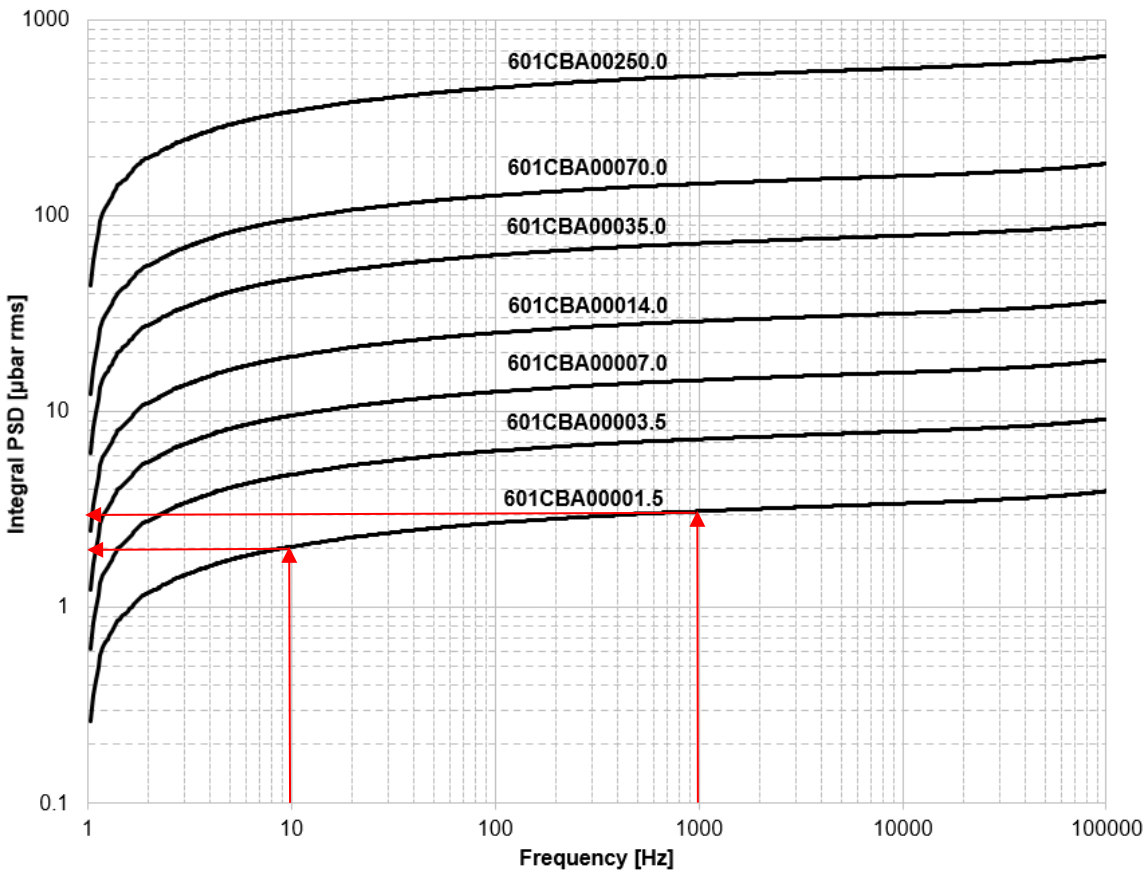

Fig. 28: Integral PSD (typ.) noise of IEPE measuring chain with 601C pressure sensors

The following table provides an overview of the typ. int. PSD noise level of the 603C IEPE sensors. The typical values are based on a 1m 1631C cable and battery powered IEPE coupler Type 5108.

	Noise (frequency range)	
603C Series (IEPE)	1Hz … 10 kHz (typ.) μbar_{rms}	1Hz … 100 kHz (typ.) μbar_{rms}
603CBA00014.0	32	37
603CBA00035.0	79	92
603CBA00070.0	160	185
603CBA00350.0	810	936
603CBA00690.0	1 620	1 873
603CBA01000.0	2 268	2 622

Below integral PSD curves allow the determination of typ. noise values at different frequency ranges. The delta in the frequency range provides the corresponding delta in noise. Below example with red lines shows a typ. noise value for a 603CBA00014.0 sensor of ca. 30 μbar_{rms} for a frequency range of 10 to 1000 Hz.

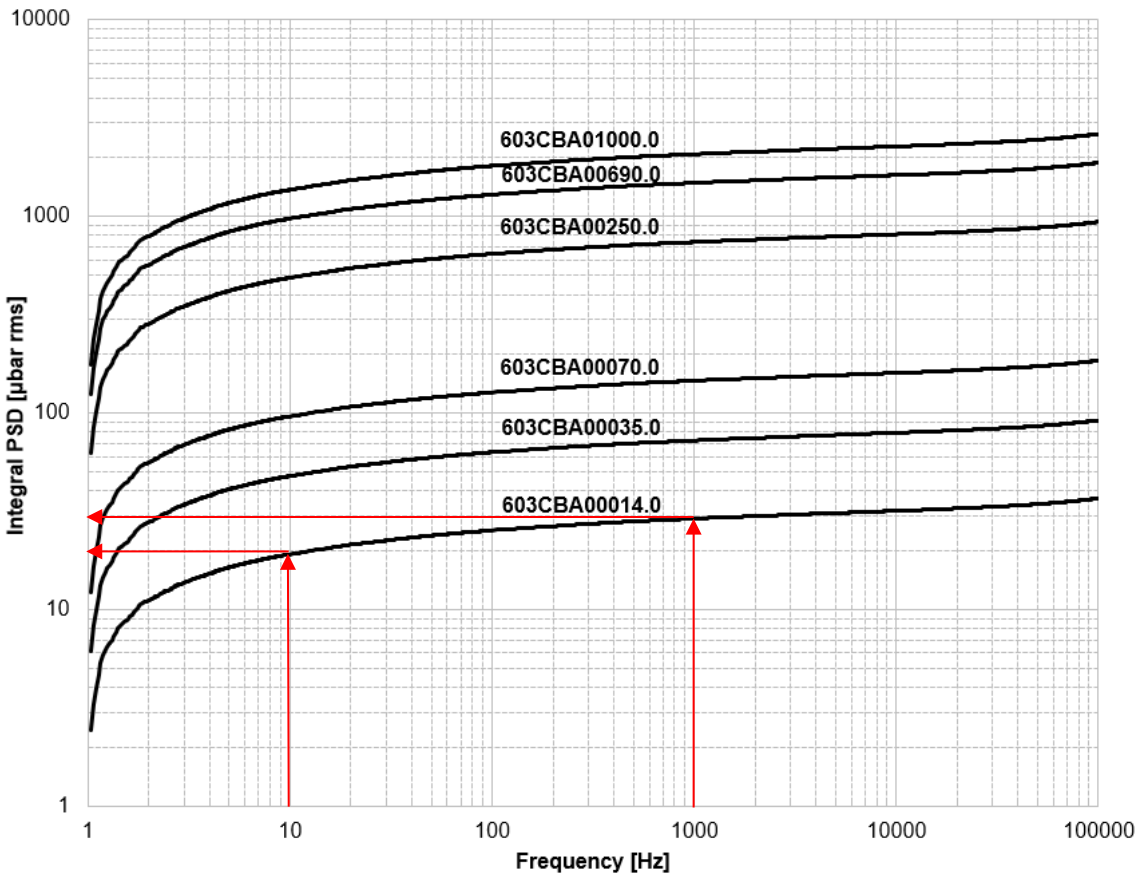

Fig. 29: Integral PSD (typ.) noise of IEPE measuring chain with 603C pressure sensors

5.2 Ground Loops

Most piezoelectric pressure sensors are constructed so that one of the electrodes is on the sensor case (the exception being ground-isolated pressure sensor versions). The installation of a non-ground isolated sensor into a metallic structure therefor may lead to ground loops.

Extraneous signals and noise in a measuring system can result from ground loops formed when system components (e.g. non-ground isolated sensor and charge amplifier) are grounded at two points that have a potential difference between them.

Since the ground conductor of the signal cable, linking the non-ground isolated sensor and signal conditioning device at two different potential, is part of the signal path of the cable, the ground loop current flowing through the cable can introduce electrical interference in the signal. Both AC (50 or 60Hz) or DC voltage may be encountered and added to the signal.

The solution to ground loop noise is to break the ground loop by one of the following ways:

Charge Amplifier
Check manual of signal conditioning device if corresponding type already comes with isolated inputs or if option is offered to disconnect signal ground from protective ground (e.g. screw at the backside of 5018 charge amplifier, etc.). Alternatively, the signal conditioning device may be powered by a battery.

Ground Isolated Adapter
Use of ground isolating adapter (e.g. Kistler Type 6503C0D or 6503C1D) to insulate resp. off-ground sensor case from metal structure at point of installation.

The max. static temperature of ground isolated adapters Types 6503CxD (PEEK GF30, glass fiber reinforced high performance plastic) shall not exceed a max. static temperature of 100°C (212°F). Use compensation sleeve (delivered with 6503CxD adapters) from 60°C (140°F) on. Compensation sleeve to be mounted between sensor and floating clamp nut.

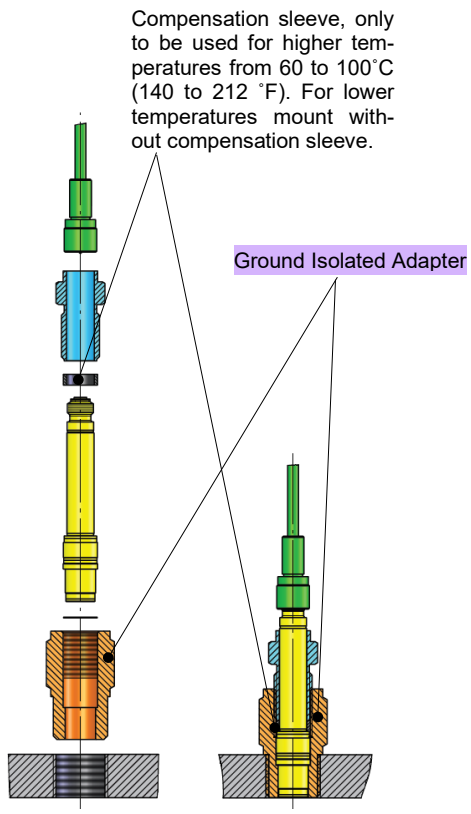

Fig. 30: Ground isolated adapter

5.3 Thermal effects

There are three ways that temperature variations effect the output of a piezoelectric pressure sensor.

- Thermal Zero Shift
- Thermal Sensitivity Shift
- Thermal Shock

When measuring pressure under changing temperatures it's important to understand the different effects to determine which effects are acting in one's application and possible mitigations.

5.3.1 Thermal Zero Shift

Ideally a piezoelectric pressure sensor should be operated in an environment with constant temperatures. Although the sensor's crystal itself produces no output change with varying temperatures, the metallic preload acting on the crystal element will expand and contract with temperature fluctuations. This produces an output which is temperature and not pressure dependent.

Thermal zero shift is only a challenge when measuring a quasi-static pressure with a long time constant, but not for fast dynamic pressures (e.g gas and dust explosions) and pressure pulsations measurements (with short time constant).

The use of a water-cooled adapter (Kistler Type 6509B), to keep the sensor at a constant operating temperature (e.g. temperature conditioning system Kistler Type 2621G), is the preferred method to mitigate thermal zero shift effects and therefor very effective for maintaining zero-point stability in long-term measurements (quasi-static). An additional benefit of using a water-cooled adapter is the increase of a sensor's operating temperature range.

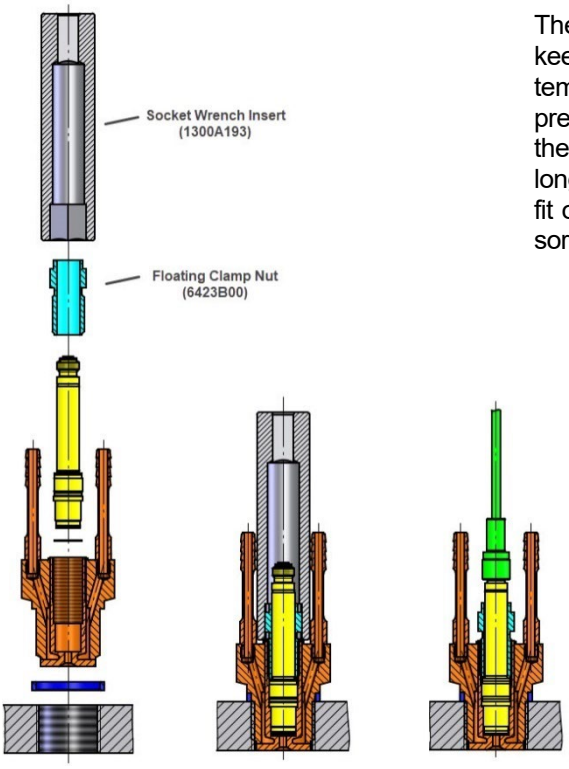

Fig. 31: Mounting of water-cooled adapter Type 6509B

Fig. 32: Temperature conditioning system Kistler Type 2621G

5.3.2 Thermal Sensitivity Shift

Piezoelectric pressure sensors exhibit a small change in sensitivity when being operated at a different temperature than ambient temperature. The sensor sensitivity provided with each calibration certificate is only valid for ambient temperature. If a sensor is used at a different constant temperature than ambient, the sensitivity indicated in the calibration certificate may be corrected with help of below graph. Below graph shows the typical change in a sensor's sensitivity at different (constant) operating temperature. The thermal sensitivity shift depends on the sensor's crystal type and shape. For some sensors the sensitivity may increase or decrease when being operated at a different static temperature.

Examples for different sensor types and temperatures:

- For a Type 601C (PE) sensor the thermal sensitivity shift at 250°C is +2.5%. This results in a sensitivity of -37.925 pC/bar (-37pC/bar * 1.025) if the sensor is operated at a constant temperature of 250°C and if the sensor sensitivity at room temperature, as shown on the calibration certificate, is -37pC/bar.

- For a Type 603C (PE) sensor the thermal sensitivity shift at 200°C is -4.5%. This results in a sensitivity of -35.335 pC/bar (-37pC/bar * 0.955) if the sensor is operated at a constant temperature of 200°C and if the sensor sensitivity at room temperature, as shown on the calibration certificate, is -37pC/bar.

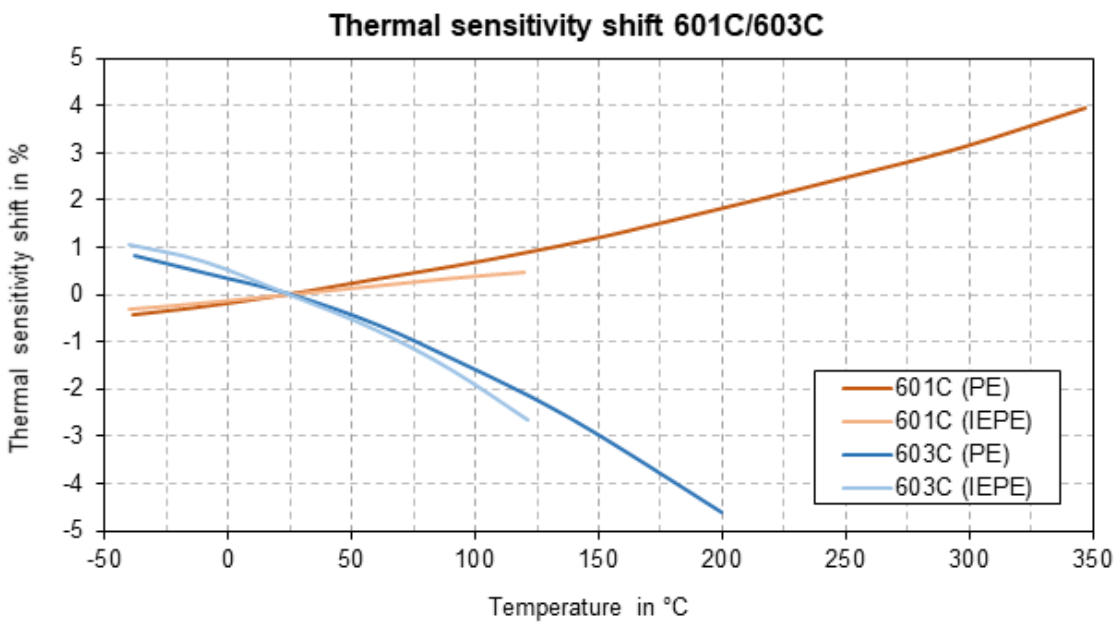

Fig. 33: Thermal sensitivity shift different sensor types

5.3.3 Thermal Shock

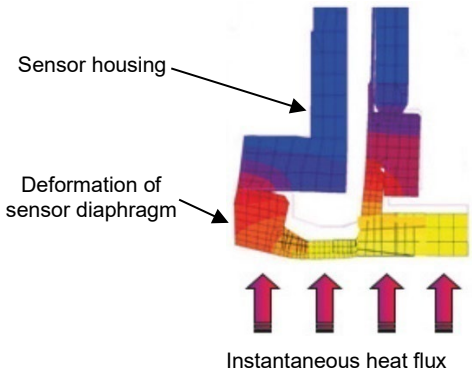

In certain applications the dynamic pressure event is accompanied by a fast temperature change of the sensor membrane too. The rapid temperature change, commonly called thermal shock, of a piezoelectric pressure sensor's membrane leads to its local deformation and subsequent unloading of the sensor's crystal. This produces an output which is temperature and not pressure dependent.

Thermal shock is mostly encountered in applications measuring dynamic peak pressures as for example explosions (e.g. dust, gas, energetic materials) or wave impacts (e.g. sloshing, flume). In this kind of applications thermal shock reaction then superimposes the wanted reaction of the sensor caused by the actual dynamic pressure change and can therefor lead to wrong peak pressure measurements. A strong thermal shock event will most likely make itself visible only after the peak pressure, by first diving below and then slowly moving back to the zero point.

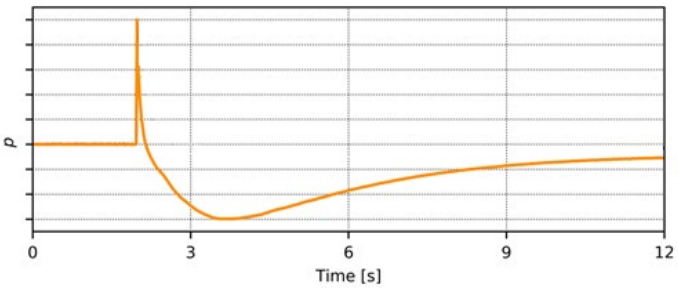

Fig. 34: Typical example of explosion pressure curve with superimposed thermal shock.

There are different ways to mitigate the negative impact of thermal shock on peak pressure measurements (sometimes in combination).

- Use of thermal-shock optimised sensors
- Recess mounting
- Membrane coating with RTV

The impact of thermal shock on the pressure signal depends on the sensor design and especially on the structure of the sensor membrane. Using a thermal shock optimised pressure sensor is one of the options to reduce thermal shock related effects (e.g. 601C series), sometimes this is however not possible because of the need of an acceleration compensated pressure sensor or sensor with high natural frequency (e.g. 603C series).

Another way to reduce thermal shock effects would be to mount the sensor recessed in a passage mounting. This may however lead to unacceptable acoustic resonances and therefore not be a suitable thermal shock protection method for most dynamic pressure measurements (see chapter "flush vs. passage mounting").

The most common protection against “hot” thermal shock (e.g. explosions) is the coating of the sensor’s diaphragm with a protective layer of 1mm (0.04”) RTV (Room-Temperature-Vulcanizing) silicone (e.g. Kistler Type 1007A or any other non-transparent RTV).

The RTV will soften and more importantly delay the thermal shock impact and therefor provide a much more accurate, consistent and repeatable peak pressure measurement. The RTV coating can be used for as long as it remains consistent and doesn’t fall off. The sensor sensitivity without and with 1mm RTV remains the same, which is why a special calibration is not needed.

When applying 1mm (0.04”) of RTV to the membrane the seal of Type 1131BC1.15 must be used. Using this sensor seal type will recess the membrane by 1mm (0.04”) and therefor make the RTV flush with the pressure chamber inner wall.

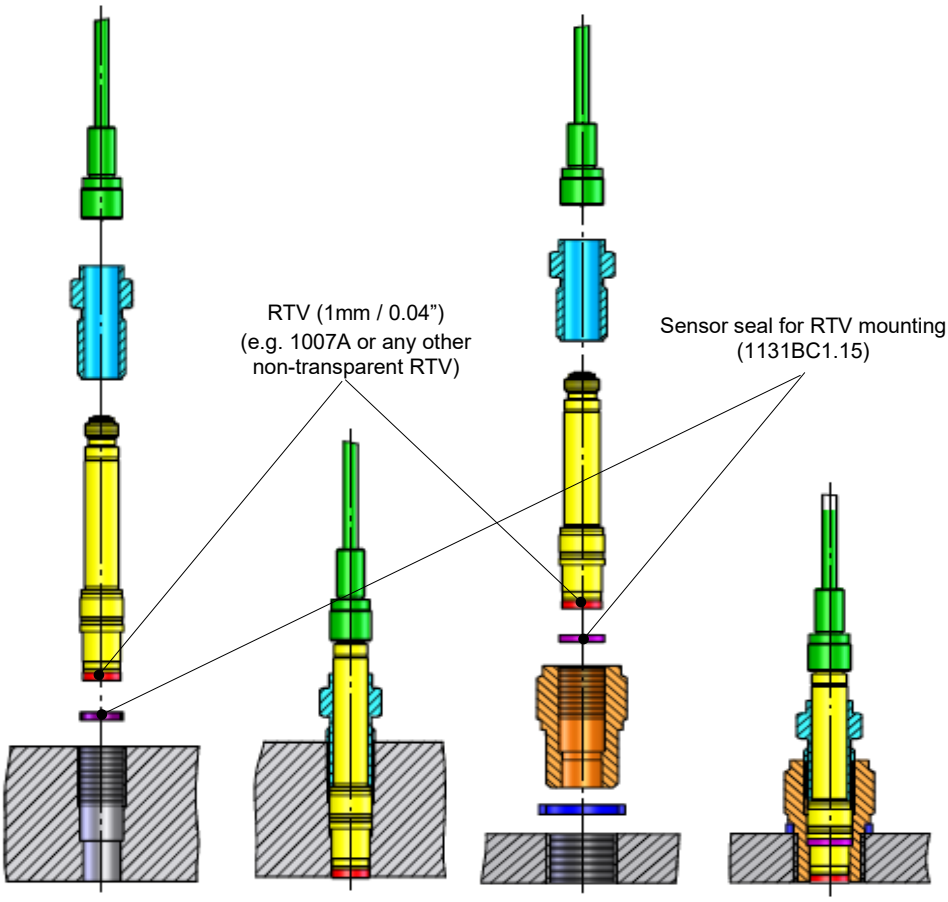

Fig. 35: RTV direct vs. adapter mounting of sensor with standard housing

To apply evenly 1mm (0.04”) of RTV across the membrane it’s best to use Kistler RTV tool of Type 1300A195 and use as explained in below steps.

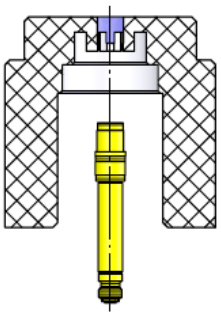

1. Introduce pressure sensor gently from below until sensor clamps. Make sure sensor membrane is clean (e.g. alcohol, etc.) and dry before introducing sensor into tool.

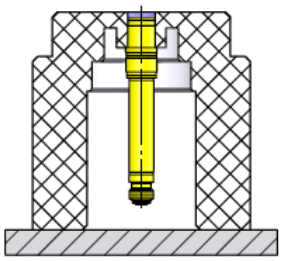

2. Put RTV tool on stable ground and then evenly apply RTV on top of recessed sensor membrane. Wipe off the excess RTV (e.g. with a plastic card across RTV tool surface).

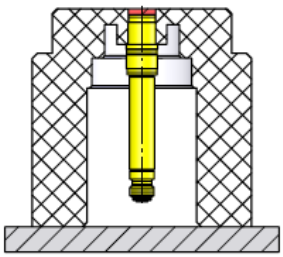

3. Leave sensor in RTV tool for the cure time needed (follow instructions for RTV used). After cure time remove pressure sensor, from below RTV tool, slowly.

5.4 High frequency response, low-pass filter and sampling rate

Piezoelectric pressure sensors may be regarded as underdamped spring mass systems with a single degree of freedom. In such systems signal frequencies close to the natural frequency lead to increase in signal amplitude and therefor wrong measurements.

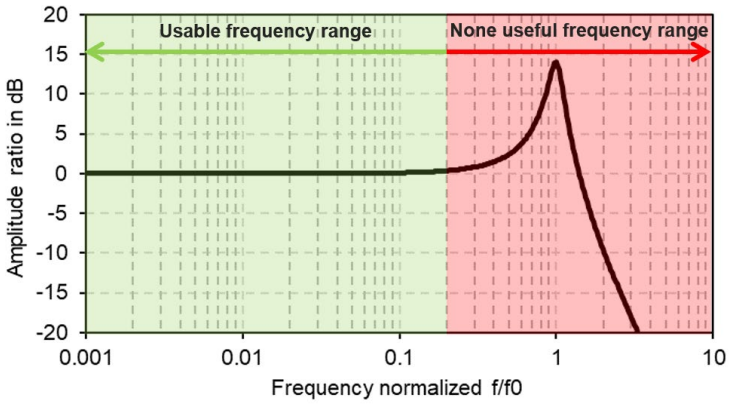

Fig. 36: Freq. response piezoelectric pressure sensor

At approximately 10% resp. 20% of the sensor's natural frequency an amplitude rise of ca. 1% resp. 5% must be expected.

Therefore, it's not recommended to set the low-pass filter in the signal conditioning any higher than 10 to 20% of the pressure sensors natural frequency. The cut-off frequency of the low-pass filter should be set according to the needs of each application.

In order to avoid wrong pressure measurements, it's further recommended to set a sampling rate that is at least 5 times (or even better 10 times) higher than the cut-off frequency of the low-pass filter.

6. Maintenance and calibration

6.1 Maintenance

6.1.1 Sensors

Piezoelectric pressure sensors are precision instruments and require careful maintenance. The correct maintenance is essential for reliable measurement results.

The all-welded hermetically sealed construction of the pressure sensors precludes any maintenance except for external cleaning. Repairs, when practical, can be accomplished only by Kistler.

Make sure to leave the cable connected to the sensor or fit a cap (Type 1891 for 10-32 or 1895 for M4 connector) to the sensors connector while cleaning the sensor.

Rough cleaning
Layers of dirt deposited on the diaphragm comprised of combustion residues, soot and lubricating oil can be removed with a mild abrasive agent like a lapping paste or polishing rubber (e.g. Cleaning Pad SCHLEIFFIX Nr.120 – Material 72000229).

Under no circumstances should the diaphragm be cleaned with a brush or by sand blasting, grinding, etc. otherwise permanent damage will result.

Fine cleaning
For fine cleaning it's recommended to dip the sensor in a cleaning agent based on mineral oil (e.g. petroleum ether, petrol), clean with a brush and then dry with compressed air (e.g. Kistler cleaning spray Type 1003).

6.1.2 Connectors

For high impedance cables, as used with PE sensors, it's important that all connectors are kept as clean and dry as possible. This becomes the more important when measuring quasi-static pressures, for which a high insulation resistance of 10^{13} Ω or better is required (for dynamic or pressure pulsation measurement with PE or IEPE sensors this is not necessary). A lower resistance degrades low-frequency response of the measuring chain and causes a charge amplifier's output signal to drift when operating in the Long time constant mode. Kistler provides special insulation testers, such as Type 5493, to measure insulation resistance of high impedance cables.

Fig. 37: Kistler insulation tester, Type 5493

Should drift be observed it's recommended to localize the trouble by disconnecting first the sensor, then the high impedance cable, and any other parts between charge amplifier and sensor if present, while observing the amplifiers output drift rate.

In most cases dirt, oil, humidity and other environmental factors will result in low IR readings. The easiest method to alleviate this problematic condition is to clean the cables, connectors, switch boxes, and the signal conditioning input connector.

However never use air-blast to clean the connectors; it will unavoidably deposit a film of water vapour. Instead Kistler strongly recommends the use of cleaning spray Type 1003. Please contact your local sales centre should, after cleaning all connectors, drift or measurement of low insulation persist after cleaning all connectors.

Fig. 38: Kistler cleaning spray, Type 1003

It is also recommended to always cap the connector after any use and to keep the sensors in their box while not in use, and to store everything in a clean, dry place.

6.2 Calibration

Calibration consists of a precise determination of a sensor's output in response to a known input. Factory calibration is performed by applying carefully-calibrated pressures with a dead-weight tester to a secondary standard sensor. This standard sensor is then used to calibrate the test sensors by simultaneously applying pressure to both sensors.

A calibration certificate is included in the scope of delivery. Duplicates may be ordered at any time.

Piezoelectric pressure sensors are well known to be very robust and stable, even after a duty high cycle of loads. Nevertheless as with all measuring equipment in laboratories a periodic re-calibration of the full measuring chain (sensor, cable, charge amplifier and data acquisition unit) should be considered.

Re-calibration can be done in one of Kistler's local tech offices or centres or by the customer itself if the appropriate calibration equipment has previously been bought. Please contact your local Kistler sales centre for further information on re-calibration or calibration equipment.

6.3 Warranty

Regarding the warranty reference is made to the agreement between the respective contracting parties.

6.4 Disposal instructions for electrical and electronic equipment

Do not discard old electronic instruments in municipal trash. For disposal at end of life, please return this product to an authorized local electronic waste disposal service or contact the nearest Kistler Instrument sales office for return instructions.

KISTLER
measure. analyze. innovate.

7. Conformity declaration

EC Declaration of Conformity
EG-Konformitätserklärung
Déclaration de conformité CE

The manufacturer / Der Hersteller / Le Fabricant:
Kistler Instrumente AG, Eulachstrasse 22, CH-8408 Winterthur, Switzerland

hereby declares that the product /
erklärt hiermit, dass das Produkt /
déclare que le présente produit:

Name / Name / Nom	**HighSens Drucksensor**
Type / Typ / Type	**601CBA, 603CBA**
Modules / Module / Modules	**none / keine / sans**
Options / Optionen / Options	**all / alle / toutes**

complies with the following provisions of directives /
die folgenden Bestimmungen der Richtlinien erfüllt /
est conforme aux dispositions suivantes des directives:

2014/30/EU	**(EMC / EMV / EMC)**
2011/65/EU	**(ROHS)**

The following harmonised standards were applied /
Folgende harmonisierte Normen wurden angewandt /
Les normes harmonisées suivantes furent appliquées:

EMC Emission / EMV Störaussendung / Emission EMC

EN 61000-6-3:2007 + A1:2011	
EN 61000-6-4:2007 + A1:2011	
EN 61326-1:2013	**(Class A+B equipment)**

EMC Immunity / EMV Störfestigkeit / Immunité EMC

EN 61000-6-1:2007	
EN 61000-6-2:2005	
EN 61326-1:2013	**(Class A+B equipment)**

Kistler Instrumente AG, Winterthur
Winterthur, Juli 2017

i.V. D. Müller
Head of Electronics Products Lines